Parts Catalog

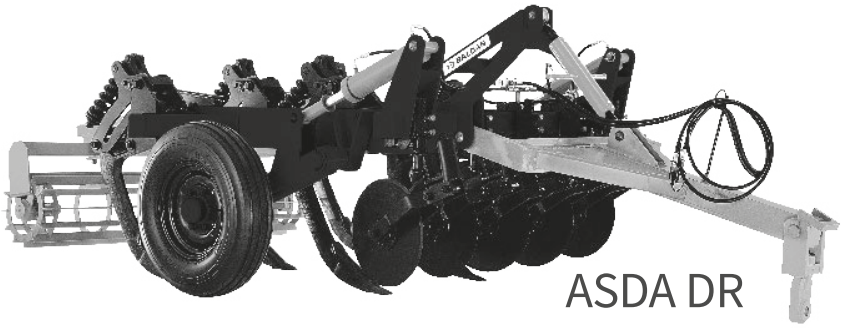

ASDA DR

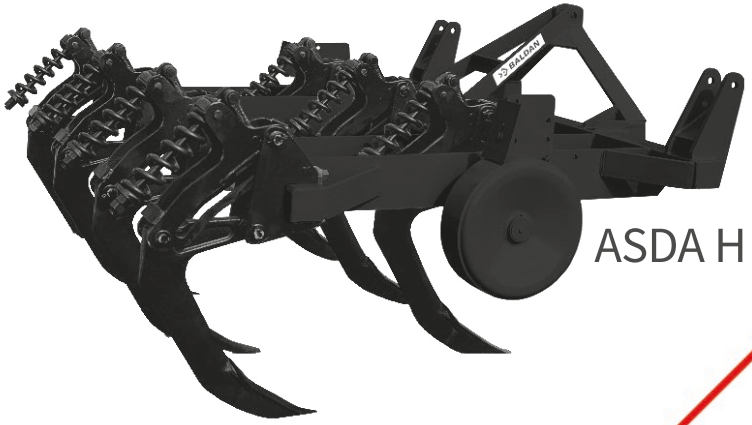

ASDA H

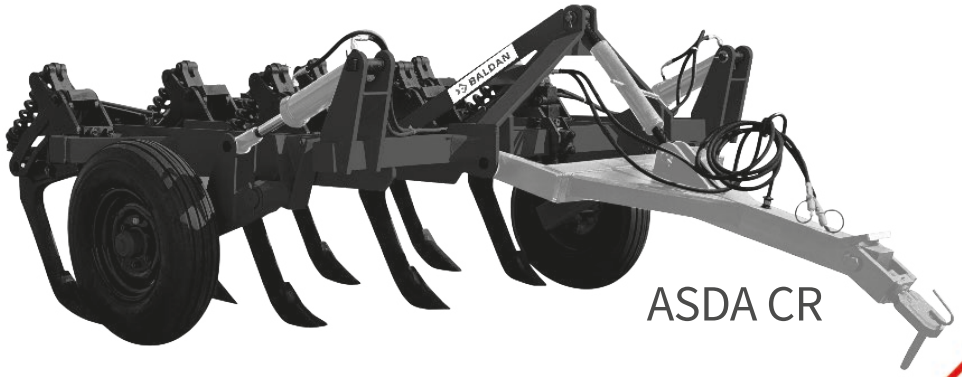

ASDA CR

ASDA DR/CR/H

Plow Subsoiler with Automatic Shank
(With Spiral and Plain Spring)

BALDAN

Index

ASDA DR *4*
Table ASDA DR *5*
ASDA CR *6*
Table ASDA CR *7*
ASDA H *8*
Main Frame ASDA CR/DR Simple Shaft - Plain Spring (5/9 Shanks) *9*
Main Frame ASDA-DR / CR (Hydraulic Shaft) *9*
Main Frame ASDA-H *10*
Articulation Support ASDA-DR / CR Simple Shaft *10*
Articulation Support ASDA-DR / CR 05, 07 and 09 Shanks (Hydraulic Shaft) *11*
Articulation Support ASDA-DR / CR 11 and 13 Shanks (Hydraulic Shaft) *11*
Complete Depth Control Wheel ASDA-H *12*
Hitch Drawbar ASDA-DR / CR *12*
Coulter Disc Cart ASDA-DR *13*
3rd Regulator ASDA-DR / CR *14*
Cylinder ASDA-DR / CR *14*
Oil Distributor ASDA-DR / CR *14*
Complete Subsoiler Shank (Helical Spring System) All Models *15*
Complete Subsoiler Shank (Plain Spring System) All Models *16*
Support Of Arm ASDA-DR *17*
Levelling Roller ASDA-DR *17*
Bearing (Grease) ASDA-DR *18*
Radial Bearing (Oil) ASDA-DR *18*
Stickers *19*
NUMERICAL INDEX **20**

BALDAN

• ASDA DR

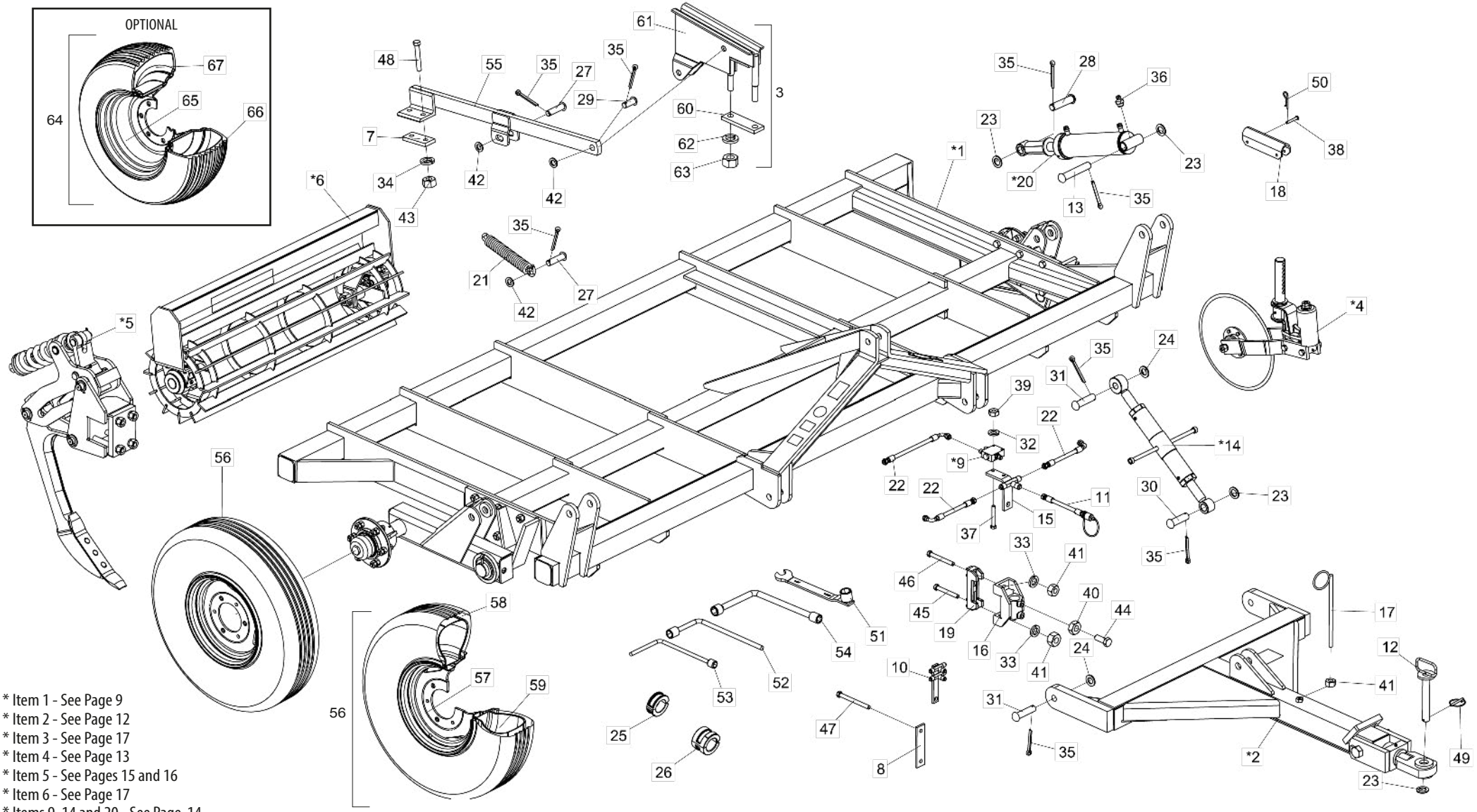

* Item 1 - See Page 9
* Item 2 - See Page 12
* Item 3 - See Page 17
* Item 4 - See Page 13
* Item 5 - See Pages 15 and 16
* Item 6 - See Page 17
* Items 9, 14 and 20 - See Page 14

• Table ASDA DR

Item	Code	Product description	All	05 Shanks	07 Shanks	09 Shanks	11 Shanks	13 Shanks
*1	5404010190-2	Complete Main Frame Asdamp-05 Shanks (Plain Spring)		1				
*1	5404050164-1	Complete Main Frame Asdacr/Asdadr-05 Shanks (With Hydraulic Shaft)(Spiral Spring)		1				
*1	5404010191-0	Complete Main Frame Asdamp-07 Shanks(Plain Spring)			1			
*1	5404050165-0	Complete Main Frame Asdacr/Asdadr-07 Shanks (With Hydraulic Shaft)(Spiral Spring)			1			
*1	5404010192-9	Complete Main Frame Asdamp-09 Shanks(Plain Spring)				1		
*1	5404050166-8	Complete Main Frame Asdacr/Asdadr-09 Shanks (With Hydraulic Shaft)(Spiral Spring)				1		
*1	5404050167-6	Complete Main Frame Asdacr/Asdadr-11 Shanks (With Hydraulic Shaft)(Spiral Spring)					1	
*1	5404050168-4	Complete Main Frame Asdacr/Asdadr-13 Shanks (With Hydraulic Shaft)(Spiral Spring)						1
*2	5084040109-7	Complete Hitch Drawbar		1	1	1		
*2	5084040108-9	Complete Hitch Drawbar					1	1
3	5530010428-1	Complete Support Of Arm		2	4	4	6	6
*4	5124010198-3	Cutting Disc (Plain Disc Blade 18" X 5,00Mm)		5	7	9	11	13
*4	5124040126-0	Cutting Disc (Rippled Plain Disc Blade 18" X 5Mm)		5	7	9	11	13
*5	5326011673-4	Complete Subsoiler Shank (Spiral Spring System)		5	7	9	11	13
*5	5326010439-6	Complete Subsoiler Shank(Plain Spring System)		5	7	9	11	13
*6	5502030017-4	Levelling Roller Of 1900Mm Oil		1				
*6	5502030018-2	Levelling Roller Of 1900Mm Grease		1				
*6	5502030014-0	Levelling Roller Of 1300Mm			2		3	
*6	5502030015-8	Levelling Roller Of 1300Mm Oil			2		3	
*6	5502030005-0	Levelling Roller Of 1600Mm Grease				2		3
*6	5502030008-5	Levelling Roller Of 1600Mm Oil				2		3
7	5040120971-6	Bar Of 2.1/2" X 5/8" X 140Mm		2	4	4	6	6
8	5040121014-5	Support Valve Fixation Bar	1					
*9	5224010106-8	Oil Distributor	1					
10	5226010019-0	Oil Divider	1					
11	5372011044-6	Hose Ø3/8" X 3500Mm With 1Trg And 1Trf With Male Quickly Coupling	2					
12	5432010025-1	Pin Of Ø1.1/4" X 215Mm	1					
13	5432120117-5	French Head Pin Ø30,53 X 165Mm	2					
*14	5484010119-6	Regulator R.1.1/4" Unc 530Mm (Closed) - 730Mm (Open)	1					
15	5530010188-6	Support Of Valve W/Nipple	1					
16	5530010953-4	Support Of Cutting Disc		5	7	9	11	13
17	5530060001-7	Small Support Of Hoses	1					
18	5558040023-9	Piston Lock Of 240Mm	2					
19	6010601523-9	Clamp		5	7	9	11	13
19	6010601523-9	Clamp	1					
*20	6020055720-7	Hydraulic Cylinder "O.D" Ø1.5/8" X Ø3.1/2" X 241Mm(Course) X 635Mm(Closed)	2					
21	6020250348-1	Helical Spring Ø31 X Ø50 X 290Mm Wire=Ø9,5Mm		2	4	4	6	6
22	6020251013-5	High Pressure Hydraulic Hose 3/8" X 900Mm With 1Tcg And 1Trg (Sae 100R2 At - P.T.4800Psi)		2				
22	6020250739-8	High Pressure Hydraulic Hose 3/8" X 1150Mm With 1Tcg And 1Trg (Sae 100R2 At -		2				
22	6020250792-4	High Pressure Hydraulic Hose 3/8" X 1550Mm With 1Tcg And 1Trg (Sae 100R2 At -		2	2			
22	6020250796-7	High Pressure Hydraulic Hose 3/8" X 2000Mm With 1Tcg And 1Trg (Sae 100R2 At -				2	2	
22	6020250889-0	High Pressure Hydraulic Hose 3/8" X 2400Mm With 1Tcg And 1Trg (Sae 100R2 At -						2
22	6020250892-0	High Pressure Hydraulic Hose 3/8" X 2700Mm With 1Tcg 90º And 1Trg (Sae 100R2 At -						2
22	6020250913-7	High Pressure Hydraulic Hose 3/8" X 1300Mm With 1Tcg And 1Trg (Sae 100R2 At -		2	2			
22	6020251004-6	High Pressure Hydraulic Hose 3/8" X 1600Mm With 1Tcg And 1Trg (Sae 100R2 At -				2		
22	6020250999-4	High Pressure Hydraulic Hose 3/8" X 2300Mm With 1Tcg And 1Trg (Sae 100R2 At -					2	
23	5024010061-1	Smooth Washer Ø33,5 X Ø53,5 X 4,75Mm	6					
24	5024010192-8	Smooth Washer Ø30 X Ø52 X 4,75Mm(Galvanised)	3					
25	5348050006-3	Complete Limiter Of Ø42 X 25Mm	4					
26	5348050009-8	Complete Limiter Of Ø42 X 49,5Mm	4					
27	5432120022-5	French Head Pin Ø1" X 90Mm		4	8	8	12	12
28	5432120029-2	French Head Pin Ø30,53 X 113Mm (Machined)		2	2	2		
28	5432010228-9	French Head Pin Ø30,53 X 120Mm					2	2
29	5432120040-3	French Head Pin Ø1" X 53Mm		2	4	4	6	6
30	5432120090-0	French Head Pin Ø30,53 X 97Mm	1					
31	5432120108-6	French Head Pin Ø28 X 105Mm	3					
32	6020010402-4	Pressure Washer 1/4" Media Industry	2					
33	6020010412-1	Pressure Washer 5/8" Media Industry		10	14	18	22	26
33	6020010412-1	Pressure Washer 5/8" Media Industry	2					
34	6020010414-8	Pressure Washer 3/4" Media Industry		4	8	8	12	12
35	6020050116-3	Cotterpin 1/4" X 2"		14	20	20	26	26
35	6020050116-3	Cotterpin 1/4" X 2"	8					
36	6020130108-7	Grease Fitting 1/8"	5					
37	6020310206-5	Hexagonal Head Bolt 1/4" X 2" 20F Unc Gr2 Rp	2					
38	6020310421-1	French Head Pin Ø9,8 X 61Mm	4					
39	6020310742-3	Hexagonal Nut 1/4" 20F Unc Gr5 Ch.7/16" Height 5,50Mm	2					
40	6020310738-5	Hexagonal Nut 5/8" 11F Unc Gr5 Ch.1.1/16" Height 11,00Mm		10	14	18	22	26
41	6020310760-1	Hexagonal Nut 5/8" 11F Unc Gr5 Ch.1.1/16" Height 15,00Mm		11	15	19	23	27
41	6020310760-1	Hexagonal Nut 5/8" 11F Unc Gr5 Ch.1.1/16" Height 15,00Mm	3					
42	5024010039-5	Smooth Washer Ø26,2 X Ø44 X 4,75Mm		6	12	12	18	18
43	6020310770-9	Hexagonal Nut 3/4" 10F Unc Gr5 Ch.1.7/32" Height 18,50Mm		4	8	8	12	12
44	6020311043-2	Hexagonal Head Bolt 5/8" X 2.1/4" 11F Unc1A Gr5 Rt Wth Point		10	14	18	22	26
45	6020311081-5	Hexagonal Head Bolt 5/8" X 5" 11F Unc1A Gr5 Rp		9	13	17	21	25
46	6020311082-3	Hexagonal Head Bolt 5/8" X 5.1/2" 11F Unc1A Gr5 Rp	1					
47	6020312083-7	Hexagonal Head Bolt 5/8" X 7" 11F Unc1A Gr5 Rp	2					
48	6020311103-0	Hexagonal Head Bolt 3/4" X 5" 10F Unc1A Gr5 Rp		4	8	8	12	12
49	6020390301-7	Lock Ø5,75 X 50Mm	1					
50	6020390308-4	Lock Nma - Type "R" Ø4,5 X 80Mm	4					
51	5138010005-7	Wrench For Hexagonal Nut 3/4" - 7/8"	1					
52	5138050005-5	Wrench "L" For Hexagonal Nut 5/8"	1					
53	5138050010-1	Wrench "L" For Hexagonal Nut 1/2"		1	1	1		
54	5138050016-0	Wrench "L" For Hexagonal Nut 5/8" - 3/4"					1	1
55	5072010059-0	Spare Arm		2	4	4	6	6
56	5498100005-9	Complete Wheel 750 X 16		2	2	2		
56	5498100092-0	Complete Wheel 900 X 16 (Reinforced)					2	2
57	6020350402-3	Rim 5,5" X 16" 16.392		2	2	2		
57	6020350418-0	Rim Rb- 2212/16 X 600 With 06 Holes					2	2
58	6020310406-8	Tyre 750 X 16 X 10 Ply		2	2	2		
58	3020310408-4	Tyre 900 X 16 X 10 Ply					2	2
59	6020050356-5	Inner Tube 750X16		2	2	2		
59	6020050358-1	Inner Tube 900X16					2	2
60	5040120970-8	Bar Of 2.1/2" X 5/8" X 200Mm		2	4	4	6	6
61	5530010429-0	Support Of Arm		2	4	4	6	6
62	6020010420-2	Pressure Washer 1" Media Industry		4	8	8	12	12
63	6020310778-4	Hexagonal Nut 1" 8F Unc Gr5 Ch.1.5/8" Height 25,00Mm		4	8	8	12	12
		Optional						
64	5498100072-5	Complete Wheel 11 X 15 - BI 10 Ply			2	2		
65	6020350397-3	Rim 10.0Lbx15" (Wheel 11X15)			2	2		
66	6020310413-0	Tyre 11X15 BI 10Ply			2	2		
67	6020050362-0	Inner Tube Pa 15/16			2	2		

• ASDA CR

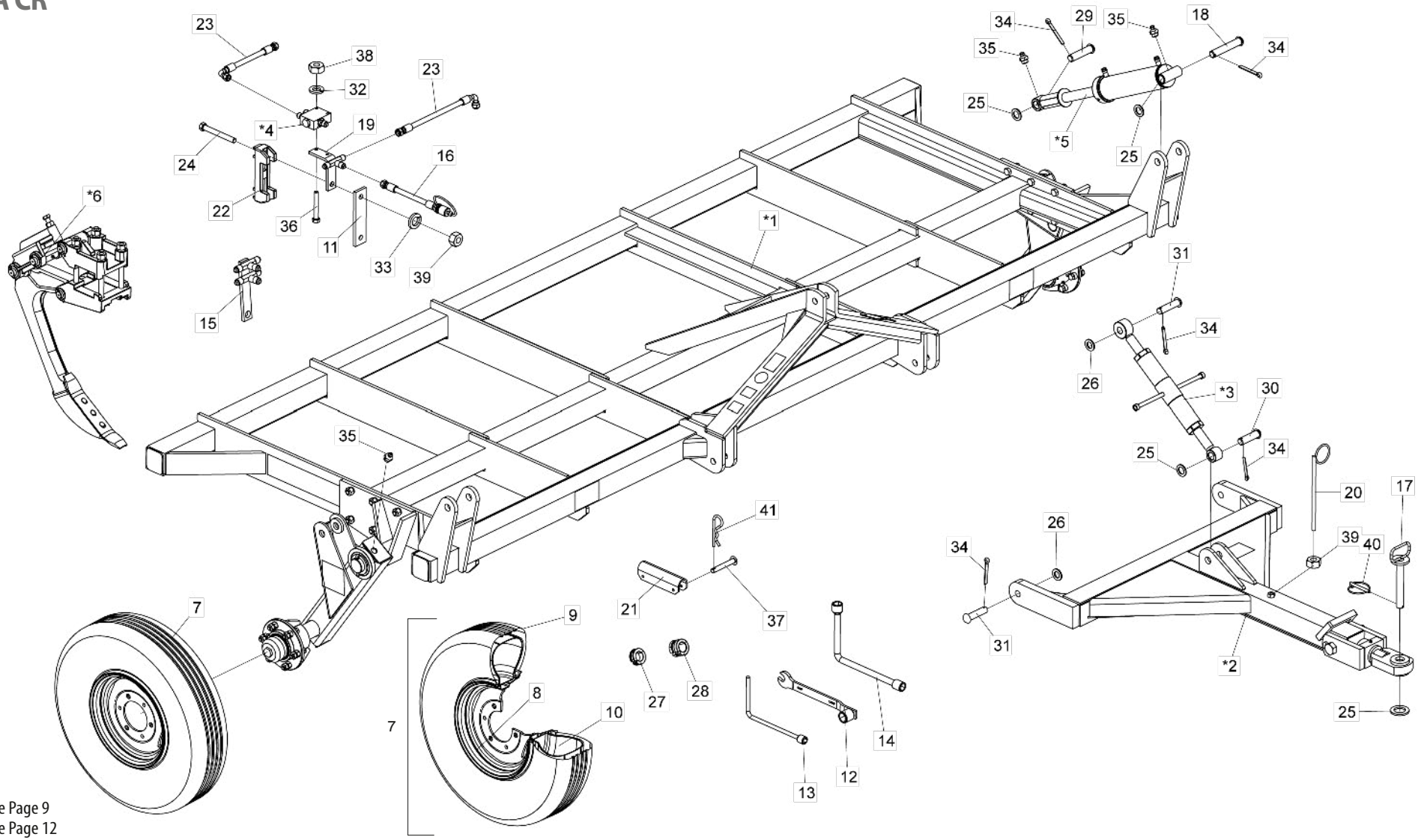

* Item 1 - See Page 9
* Item 2 - See Page 12
* Item 3, 4 and 5 - See Page 14
* Item 6 - See Pages 15 and 16

• Table ASDA CR

Item	Code	Product description	All	05 Shanks	07 Shanks	09 Shanks	11 Shanks	13 Shanks
*1	5404010190-2	Complete Main Frame Asdamp-05 Shanks (Plain Spring)		1				
*1	5404050164-1	Complete Main Frame Asdacr/Asdadr-05 Shanks (With Hydraulic Shaft) (Spiral Spring)		1				
*1	5404010191-0	Complete Main Frame Asdamp-07 Shanks (Plain Spring)			1			
*1	5404050165-0	Complete Main Frame Asdacr/Asdadr-07 Shanks (With Hydraulic Shaft) (Spiral Spring)			1			
*1	5404010192-9	Complete Main Frame Asdamp-09 Shanks (Plain Spring)				1		
*1	5404050166-8	Complete Main Frame Asdacr/Asdadr-09 Shanks (With Hydraulic Shaft) (Spiral Spring)				1		
*1	5404050167-6	Complete Main Frame Asdacr/Asdadr-11 Shanks (With Hydraulic Shaft) (Spiral Spring)					1	
*1	5404050168-4	Complete Main Frame Asdacr/Asdadr-13 Shanks (With Hydraulic Shaft) (Spiral Spring)						1
*2	5084040109-7	Hitch Drawbar		2	2	2		
*2	5084040108-9	Hitch Drawbar					2	2
*3	5484010119-6	Regulator R.1.1/4" Unc 530Mm (Closed) - 730Mm (Open)	1					
*4	5224010106-8	Oil Distributor	1					
*5	6020055720-7	Hydraulic Cylinder "O.D" Ø1.5/8" X Ø3.1/2" X 241Mm(Course) X 635Mm(Closed)	2					
*6	5326010439-6	Complete Subsoiler Shank(Plain Spring System)		5	7	9	11	13
*6	5326011673-4	Complete Subsoiler Shank(Helical Spring System)		5	7	9	11	13
7	5498100005-9	Complete Wheel 750 X 16		2	2	2		
7	5498100092-0	Complete Wheel 900 X 16 (Reinforced)					2	2
8	6020350402-3	Rim 5,5" X 16" 16.392		2	2	2		
8	6020350418-0	Rim Rb- 2212/16 X 600 With 06 Holes					2	2
9	6020310406-8	Tyre 750 X 16 X 10 Ply		2	2	2		
9	6020310408-4	Tyre 900 X 16 X 10 Ply					2	2
10	6020050356-5	Inner Tube 750X16		2	2	2		
10	6020050358-1	Inner Tube 900X16					2	2
11	5040121014-5	Support ValveFixation Bar	1					
12	5138010005-7	Wrench For Hexagonal Nut 3/4" - 7/8"	1					
13	5138050010-1	Wrench "L" For Hexagonal Nut 1/2"		1	1	1		
14	5138050016-0	Wrench "L" For Hexagonal Nut 5/8" - 3/4"					1	1
15	5226010019-0	Oil Divider		1	1	1		
16	5372011044-6	Hose Ø3/8" X 3500Mm With 1Trg And 1Trf With Male Quickly Coupling	2					
17	5432010025-1	Pin Of Ø1.1/4" X 215Mm	1					
18	5432120117-5	French Head Pin Ø30,53 X 165Mm	2					

Item	Code	Product description	All	05 Shanks	07 Shanks	09 Shanks	11 Shanks	13 Shanks
19	5530010188-6	Support Of Valve W/Nipple	1					
20	5530060001-7	Small Support Of Hoses	1					
21	5558040023-9	Piston Lock Of 240Mm	2					
22	6010601523-9	Clamp	1					
23	6020250739-8	High Pressure Hydraulic Hose 3/8" X 1150Mm With 1Tcg And 1Trg (Sae 100R2 At		2				
23	6020250792-4	High Pressure Hydraulic Hose 3/8" X 1550Mm With 1Tcg And 1Trg (Sae 100R2 At -			2			
23	6020250796-7	High Pressure Hydraulic Hose 3/8" X 2000Mm With 1Tcg And 1Trg (Sae 100R2 At -				2	2	
23	6020250889-0	High Pressure Hydraulic Hose 3/8" X 2400Mm With 1Tcg And 1Trg (Sae 100R2 At -						2
23	6020251013-5	High Pressure Hydraulic Hose 3/8" X 900Mm With 1Tcg And 1Trg (Sae 100R2 At - P.T.4800Psi)		2				
23	6020250913-7	High Pressure Hydraulic Hose 3/8" X 1300Mm With 1Tcg And 1Trg (Sae 100R2 At -			2			
23	6020251004-6	High Pressure Hydraulic Hose 3/8" X 1600Mm With 1Tcg And 1Trg (Sae 100R2 At -				2		
23	6020250999-4	High Pressure Hydraulic Hose 3/8" X 2300Mm With 1Tcg And 1Trg (Sae 100R2 At -					2	
23	6020250892-0	High Pressure Hydraulic Hose 3/8" X 2700Mm With 1Tcg 90º And 1Trg (Sae 100R2 At -						2
24	6020312083-7	Hexagonal Head Bolt 5/8" X 7" 11F Unc1A Gr5 Rp	2					
25	5024010061-1	Smooth Washer Ø33,5 X Ø53,5 X 4,75Mm	5					
26	5024010192-8	Smooth Washer Ø30 X Ø52 X 4,75Mm(Galvanised)	3					
27	5348050006-3	Complete Limiter Of Ø42 X 25Mm	4					
28	5348050009-8	Complete Limiter Of Ø42 X 49,5Mm	4					
29	5432120029-2	French Head Pin Ø30,53 X 113Mm (Machined)	2					
30	5432120090-0	French Head Pin Ø30,53 X 97Mm	1					
31	5432120108-6	French Head Pin Ø28 X 105Mm	3					
32	6020010402-4	Pressure Washer 1/4" Media Industry	2					
33	6020010412-1	Pressure Washer 5/8" Media Industry		4	4	2	4	2
34	6020050116-3	Cotterpin 1/4" X 2"		12	8	8	8	8
35	6020130108-7	Grease Fitting 1/8"	5					
36	6020310206-5	Hexagonal Head Bolt 1/4" X 2" 20F Unc Gr2 Rp	2					
37	6020310421-1	French Head Pin Ø9,8 X 61Mm	4					
38	6020310742-3	Hexagonal Nut 1/4" 20F Unc Gr5 Ch.7/16" Height 5,50Mm	2					
39	6020310760-1	Hexagonal Nut 5/8" 11F Unc Gr5 Ch.1.1/16" Height 15,00Mm	3					
40	6020390301-7	Lock Ø5,75 X 50Mm	1					
41	6020390308-4	Lock Nma - Type "R" Ø4,5 X 80Mm		4	4	4	4	8

• ASDA H

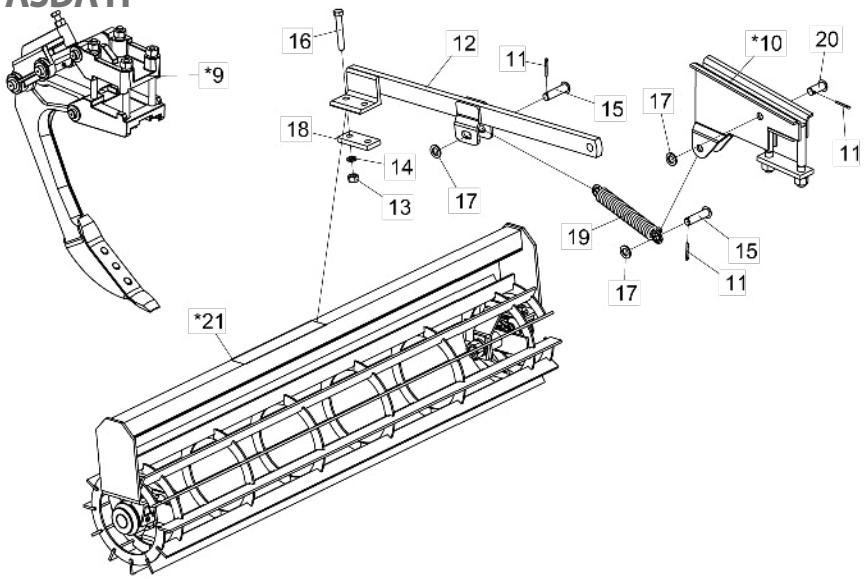

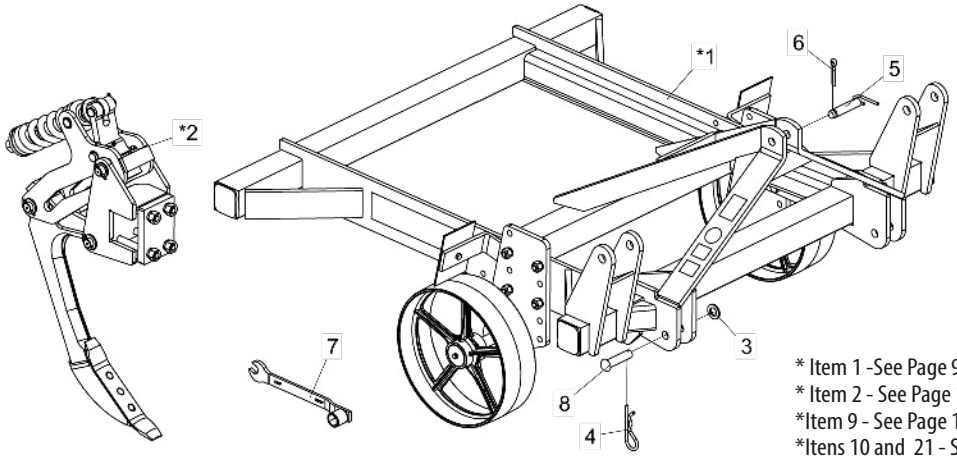

Item	Code	Product description	All	ASDAH 03 Shanks	ASDAH 05 Shanks	ASDAH 07 Shanks	ASDAH 09 Shanks
*1	5404010957-1	Complete Main FrameASDAH-05 Shanks(W/Deph Control Wheel)		1	1		
*1	5404010958-0	Complete Main FrameASDAH-07 Shanks(W/Deph Control Wheel)				1	
*1	5404010959-8	Complete Main FrameASDAH-09 Shanks(W/Deph Control Wheel)					1
*2	5326011673-4	Complete Subsoiler Shank(Helical Spring System)		3	5	7	9
3	5024010192-8	Smooth Washer Ø30 X Ø52 X 4,75mm	3				
4	6020390308-4	Lock Nma - Type "R" de Ø4,5 X 80mm (455)	2				
5	5432060031-9	Pin Ø27,80 X 117mm Usin. C/Canal	1				
6	6020050114-7	Cotterpin 1/4" X 1.1/2"	1				
7	5138010005-7	Wrench for Hexagonal Nut 3/4" - 7/8"	1				
8	5432120108-6	French Head Pin Ø28 X 105mm	2				
		Optional					
*9	5326010439-6	Complete Subsoiler Shank(Plain Spring System)		3	5	7	
*10	5530010428-1	Complete Support			2	4	
11	6020050116-3	Cotterpin 1/4" X 2"			6	12	
12	5072010059-0	Spare Arm	2				
13	6020310770-9	Hexagonal Nut 3/4" 10F Unc Gr5 Ch.1.7/32" Alt.18,50mm			4	8	
14	6020010414-8	Pressure Washer 3/4"			4	8	
15	5432120022-5	French Head Pin Ø1" X 90mm			4	8	
16	6020311103-0	Hexagonal Head Bolt 3/4" X 5" 10F Unc1A Gr5 Rp			4	8	
17	5024010039-5	Smooth Washer Ø26,2 X Ø44 X 4,75mm			6	12	
18	5040120971-6	Bar 2.1/2" X 5/8" X 140mm			2	4	
19	6020250348-1	Helical Spring Ø31 X Ø50 X 290mm			2	4	
20	5432120040-3	French Head Pin Ø1" X 53mm			2	4	
*21	5502030018-2	Levelling Roller 1900mm Grease			1		
*21	5502030014-0	Levelling Roller 1300mm Grease				2	

* Item 1 -See Page 9
* Item 2 - See Page 15
*Item 9 - See Page 16
*Itens 10 and 21 - See Page 17

• Main Frame ASDA CR/DR Simple Shaft - Plain Spring (5 and 9 Shanks)

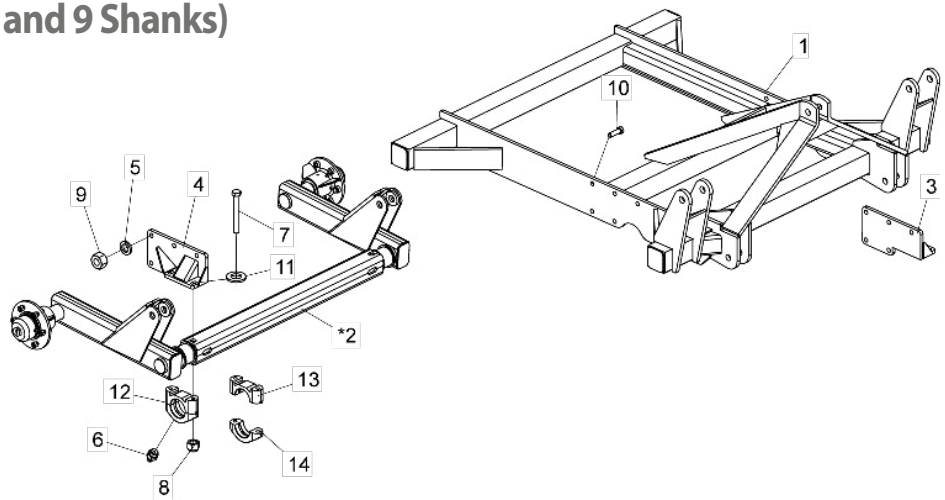

Item	Code	Product description	All	05 Shanks	07 Shanks	09 Shanks
1	5404010188-0	Main Frame Asda-05 Shanks		1		
1	5404010189-9	Main Frame Asda-07 Shanks			1	
1	5404010187-2	Main Frame Asda-09 Shanks				1
*2	5530011145-8	Articulation Support(Asdamp 5 Shanks)		1		
*2	5530011143-1	Articulation Support(Asdamp 7 Shanks)			1	
*2	5530011141-5	Articulation Support (Asdamp 9 Shanks)				1
3	5530011146-6	Left Support Of Bearing	1			
4	5530011147-4	Right Support Of Bearing	1			
5	6020010414-8	Pressure Washer 3/4" Media Industry	10			
6	6020130108-7	Grease Fitting 1/8"	2			
7	6020310559-5	Hexagonal Head Bolt 5/8" X 5" 18F Unf1A Gr8 Rp (Phosphated)	4			
8	6020310761-0	Self-Locking Nut With Nylon Upper 5/8" 18F Unf Gr5 Ch.15/16" H.19,50Mm	4			
9	6020310770-9	Hexagonal Nut 3/4" 10F Unc Gr5 Ch.1.7/32" Height 18,50Mm	10			
10	6020311096-3	Hexagonal Head Bolt 3/4" X 2.1/2" 10F Unc1A Gr5 Rp	10			
11	5024010154-5	Smooth Washer Ø16 X Ø29 X 3,00Mm	4			
12	5368010416-2	Spare Bearing	2			
13	5368010315-8	Lower Bearing	2			
14	5368010313-1	Upper Bearing	2			

* Item 2 - See Page 10

• Main Frame ASDA-DR / CR (Hydraulic Shaft)

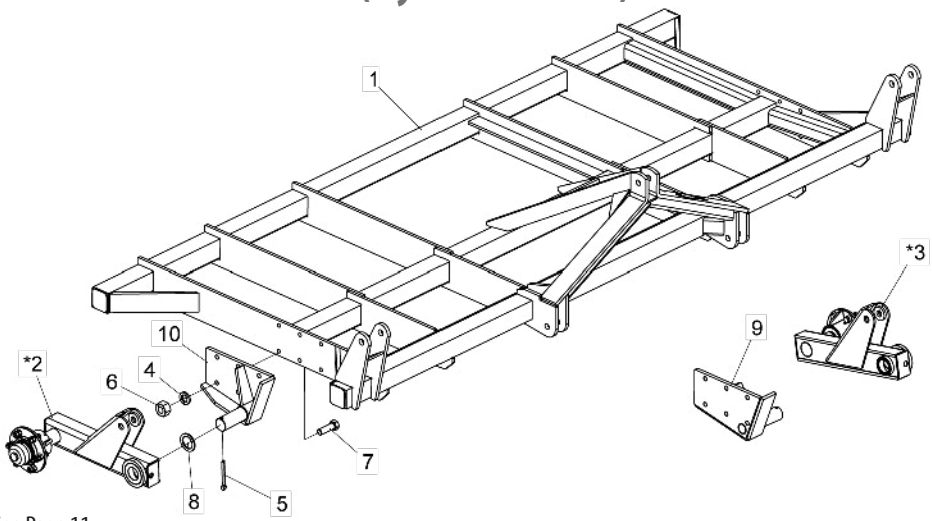

Item	Code	Product description	All	05 Shanks	07 Shanks	09 Shanks	11 Shanks	13 Shanks
1	5404050163-3	Main Frame Asdah/Asdacr/Asdadr-05 Shanks		1				
1	5404050162-5	Main Frame Asdah/Asdacr/Asdadr-07 Shanks			1			
1	5404050161-7	Main Frame Asdah/Asdacr/Asdadr-09 Shanks				1		
1	5404050160-9	Main Frame Asdacr/Asdadr-11 Shanks					1	
1	5404050159-5	Main Frame Asdacr/Asdadr-13 Shanks						1
*2	5530490041-4	Complete Articulation Left Support Of Shanks		1	1	1		
*2	5530490049-0	Articulation Right Complete Support Of Shanks					1	1
*3	5530490042-2	Complete Articulation Left Support Of Shanks		1	1	1		
*3	5530490048-1	Articulation Left Complete Support Of Shanks					1	1
4	6020010414-8	Pressure Washer 3/4" Media Industry	12					
5	6020050126-0	Cotterpin 3/8" X 3.1/2"	2					
6	6020310770-9	Hexagonal Nut 3/4" 10F Unc Gr5 Ch.1.7/32" Height 18,50Mm	12					
7	6020311096-3	Hexagonal Head Bolt 3/4" X 2.1/2" 10F Unc1A Gr5 Rp	12					
8	5024010296-7	Smooth Washer Ø66 X Ø92 X 1/4"	2					
9	5530100255-5	Complete Left Support	1					
10	5530100256-3	Complete Right Support	1					

* Item 2 - See Page 11

• Main Frame ASDA-H

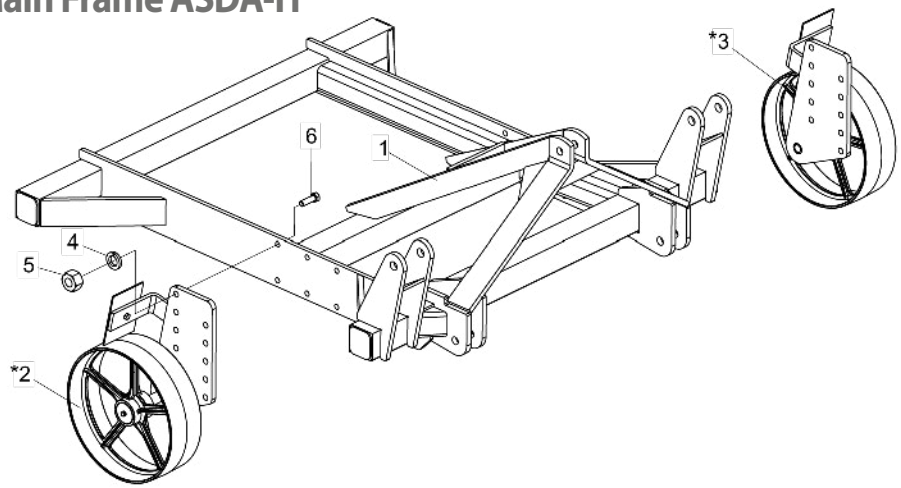

Item	Code	Product description	All	05 Shanks	07 Shanks	09 Shanks
1	5404050163-3	Main Frame Asdah/Asdacr/Asdadr-05 Shanks		1		
1	5404050162-5	Main Frame Asdah/Asdacr/Asdadr-07 Shanks			1	
1	5404050161-7	Main Frame Asdah/Asdacr/Asdadr-09 Shanks				1
*2	5498010298-2	Right Complete Depth Wheel	1			
*3	5498010299-0	Left Complete Depth Wheel	1			
4	6020010414-8	Pressure Washer 3/4" Media Industry	8			
5	6020310770-9	Hexagonal Nut 3/4" 10F Unc Gr5 Ch.1.7/32" Height 18,50Mm	8			
6	6020311096-3	Hexagonal Head Bolt 3/4" X 2.1/2" 10F Unc1A Gr5 Rp	8			

* Item 2 - See Page 12

• Articulation Support ASDA-DR / CR Simple Shaft

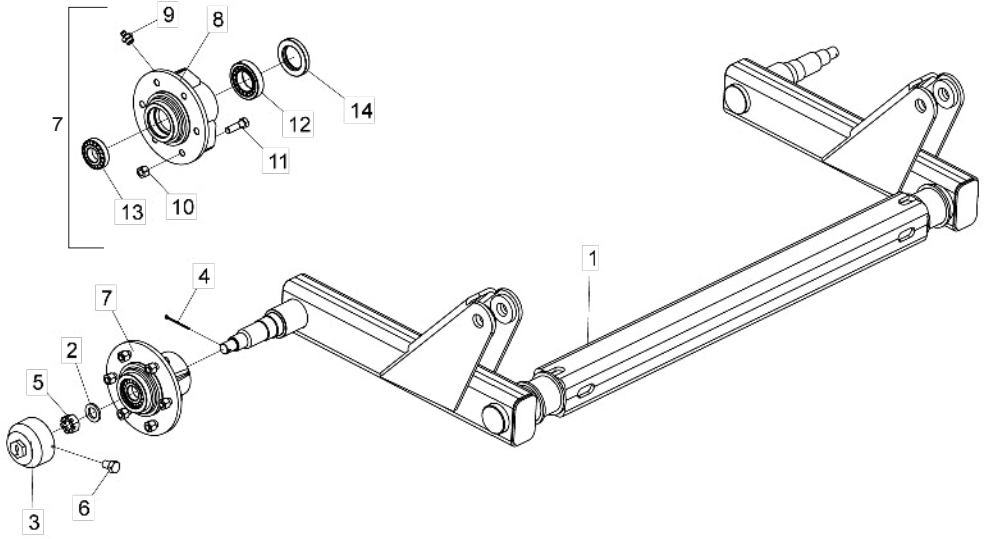

Item	Code	Product description	All	05 Shanks	07 Shanks	09 Shanks
1	5530011144-0	Articulation Support (Asdamp-5 Shanks)		1		
1	5530011142-3	Articulation Support (Asdamp-7 Shanks)			1	
1	5530011140-7	Articulation Support (Asdamp-9 Shanks)				1
2	5024010039-5	Smooth Washer Ø26,2 X Ø44 X 4,75Mm	2			
3	5096020004-4	Wheel Hub Cap	2			
4	6020050102-3	Cotterpin 1/8" X 2.1/2"	2			
5	6020310800-4	Nut 1" 14F Uns Gr5 Ch.1.1/2" Height 22,00Mm	2			
6	6020311020-3	Hexagonal Head Bolt 5/16" X 1/2" 18F Unc1A Gr2 Rt	2			
7	5204060025-6	Complete Wheel Hub	2			
8	5204010063-6	Wheel Hub (Spare)	2			
9	6020130108-7	Grease Fitting 1/8"	2			
10	6020310816-0	Double Hexagonal Nut Of Wheel 9/16" 18F Unf Gr5 Ch.7/8" Height 19,00Mm	12			
11	6020310998-1	Hexagonal Head Bolt 9/16" X 2" 18F Unf1A Gr5 Rp	12			
12	6020350056-7	Bearing 32210	2			
13	6020350080-0	Bearing 30207	2			
14	6020350224-1	Retainer Ø55,00 X Ø90,00 X 12,50Mm (Arca 5163 Bg / Sabo 00964 B)	2			

• Articulation Support ASDA-DR / CR 05, 07 and 09 Shanks (Hydraulic Shaft)

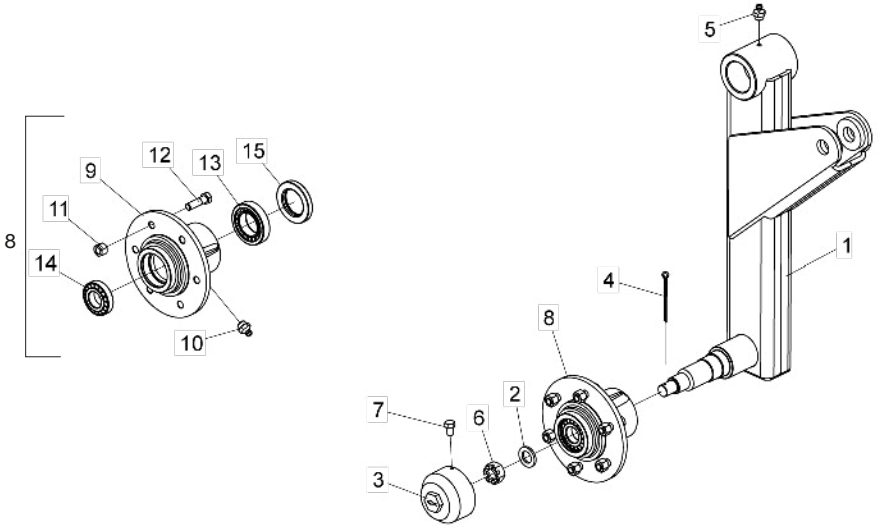

Item	Code	Product description	All	Right	Left
1	5530490038-4	Wheel Articulation Right Support		1	
1	5530490039-2	Wheel Articulation Left Support			1
2	5024010039-5	Smooth Washer Ø26,2 X Ø44 X 4,75Mm	1		
3	5096020004-4	Wheel Hub Cap	1		
4	6020050102-3	Cotterpin 1/8" X 2.1/2"	1		
5	6020130108-7	Grease Fitting 1/8"	1		
6	6020310800-4	Nut 1" 14F Uns Gr5 Ch.1.1/2" Height 22,00Mm	1		
7	6020311020-3	Hexagonal Head Bolt 5/16" X 1/2" 18F Unc1A Gr2 Rt	1		
8	5204060025-6	Complete Wheel Hub	1		
9	5204010063-6	Wheel Hub (Spare)	1		
10	6020130108-7	Grease Fitting 1/8"	1		
11	6020310816-0	Double Hexagonal Nut Of Wheel 9/16" 18F Unf Gr5 Ch.7/8" Height 19,00Mm	6		
12	6020310998-1	Hexagonal Head Bolt 9/16" X 2" 18F Unf1A Gr5 Rp	6		
13	6020350056-7	Bearing 32210	1		
14	6020350080-0	Bearing 30207	1		
15	6020350224-1	Retainer Ø55,00 X Ø90,00 X 12,50Mm (Arca 5163 Bg / Sabo 00964 B)	1		

• Articulation Support ASDA-DR / CR 11 and 13 Shanks (Hydraulic Shaft)

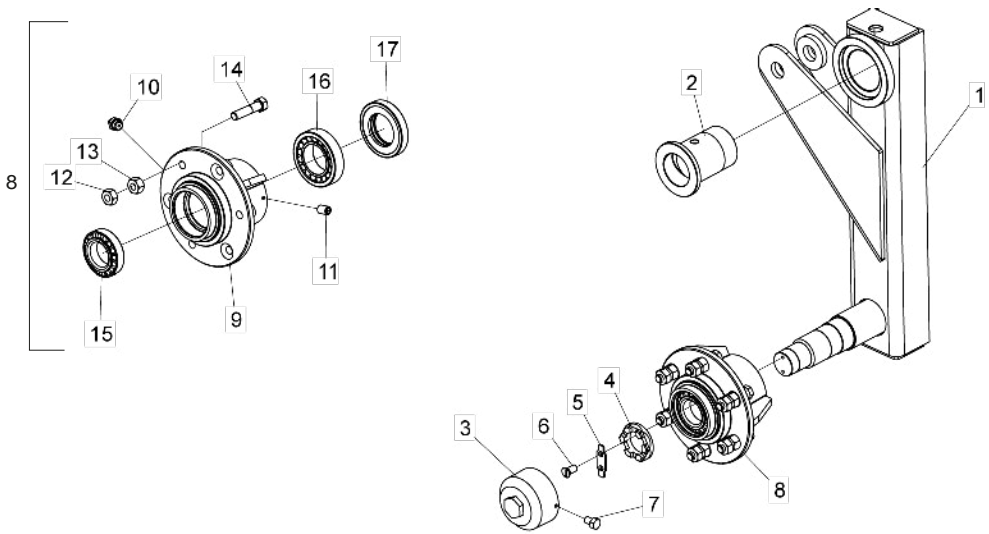

Item	Code	Product description	All	Right	Left
1	5530490046-5	Wheel Articulation Right Support		1	
1	5530490047-3	Wheel Articulation Left Support			1
2	5080010303-4	Bushing Of Ø81,8 X Ø110 X 125,3Mm	1		
3	5096020006-0	Wheel Hub Cap	1		
4	5456020007-5	Nut Ø48,7 - 14 Fpp-W (Special)	1		
5	5558020002-7	Lock(Small)	1		
6	6020310128-0	Bolt (Thread Machined) 1/4" X 1/2" 20F Unc1A Gr5 Rt	2		
7	6020311020-3	Hexagonal Head Bolt 5/16" X 1/2" 18F Unc1A Gr2 Rt	1		
8	5204010255-8	Complete Wheel Hub	1		
9	5204010015-6	Wheel Hub (Spare)	1		
10	6020130108-7	Grease Fitting 1/8"	1		
11	6020310096-8	Allen Bolt S/C 5/16" X 1/2" 18F Unc1A Cl12.9 Rt (Phosphated)	2		
12	6020310805-5	Hexagonal Nut 5/8" 18F Unf Gr5 Ch.1.1/16" Height 13,50Mm	6		
13	6020310807-1	Conic Hexagonal Nut Of Wheel 5/8" 18F Unf Gr5 Ch.1.1/16" Height 19,00Mm	6		
14	6020311078-5	Hexagonal Head Bolt 5/8" X 2.3/4" 18F Unf1A Gr5 Rp	6		
15	6020350056-7	Bearing 32210	1		
16	6020350074-5	Bearing 32212	1		
17	6020350242-0	Retainer Ø63,50 X Ø110,00 X 18,00Mm (Arca 5417 Gb / Sabo 01486 Gb)	1		

• Complete Depth Control Wheel ASDA-H

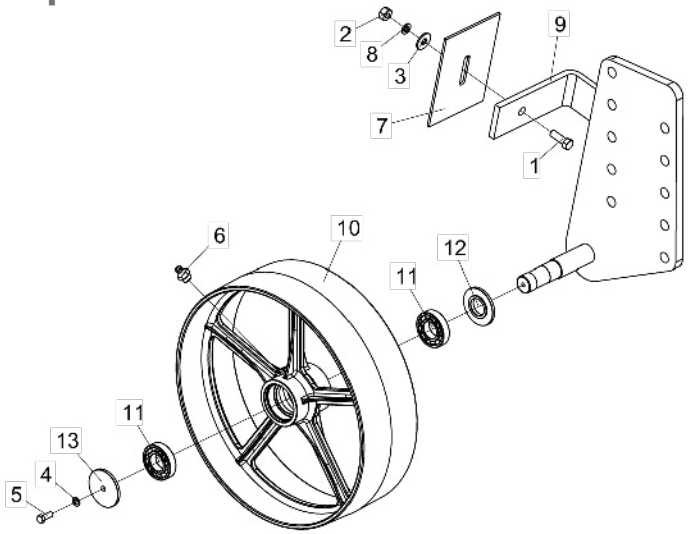

Item	Code	Product description	All	Right	Left
1	6020312001-2	Hexagonal Head Bolt 1/2" X 1.1/2" 12F W GR5 Rt	1		
2	6020310754-7	Hexagonal Nut 1/2" 12F W GR5 Ch.7/8" Alt.12,00mm	1		
3	5024010068-9	Smooth Washer Ø13,3 X Ø35,5 X 3,00mm	1		
4	6020010406-7	Pressure Washer 3/8" Média Industrial	1		
5	6020310054-2	Hexagonal Head Bolt 3/8" X 1" 16F Unc1A GR5 Rt	1		
6	6020130108-7	Grease Fitting 1/8"	1		
7	5352070007-9	Deph Wheel Scraper	1		
8	6020010410-5	Pressure Washer 1/2" Média Industrial	1		
9	5530100264-4	Right Support of Wheel		1	
9	5530100263-6	Left Support of Wheel			1
10	5498010289-3	Spare Deph Control Wheel	1		
11	6020350022-2	Bearing 6207-Z	2		
12	5558080010-5	Lock W/Large Hole	1		
13	5558080009-1	Lock W/Small Hole	1		

• Hitch Drawbar ASDA-DR / CR

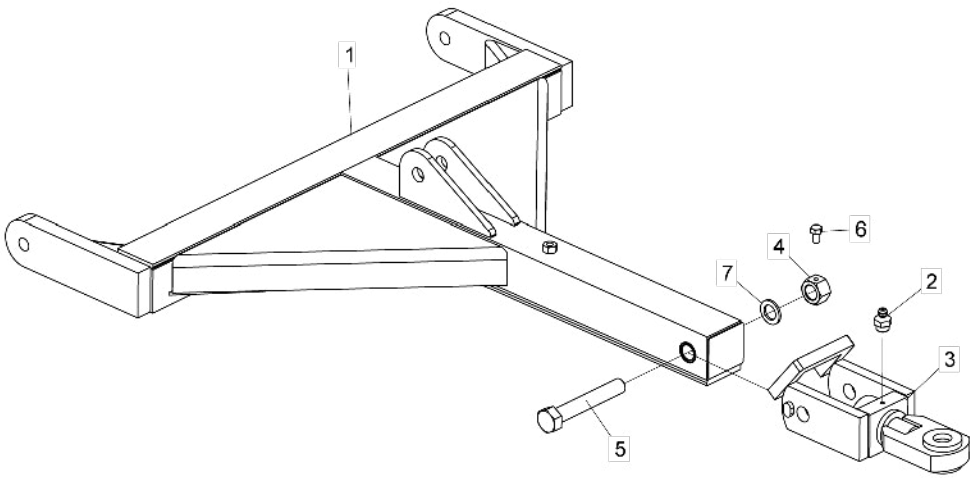

Item	Code	Product description	All	05 to 09 Shanks	11 and 13 Shanks
1	5084040107-0	Hitch Drawbar		1	
1	5084040106-2	Hitch Drawbar			1
2	6020130100-1	Grease Fitting 1/4"		1	
2	6020130108-7	Grease Fitting 1/8"			1
3	5332020007-1	Hitch Shackle	1		
4	5456010022-4	Hexagonal Nut 1.1/4" 7F Unc Gr5 Key.2" Height.31,00Mm With Hole R.3/8"	1		
5	6020310248-0	Hexagonal Head Bolt 1.1/4" X 8" 7F Unc1A Gr5 Rp	1		
6	6020311030-0	Hexagonal Head Bolt 3/8" X 5/8" 16F Unc1A Gr2 Rt	1		
7	6020010453-9	Smooth Washer M33 Ø34 x Ø60 x 5mm	1		

• Coulter Disc Cart ASDA-DR

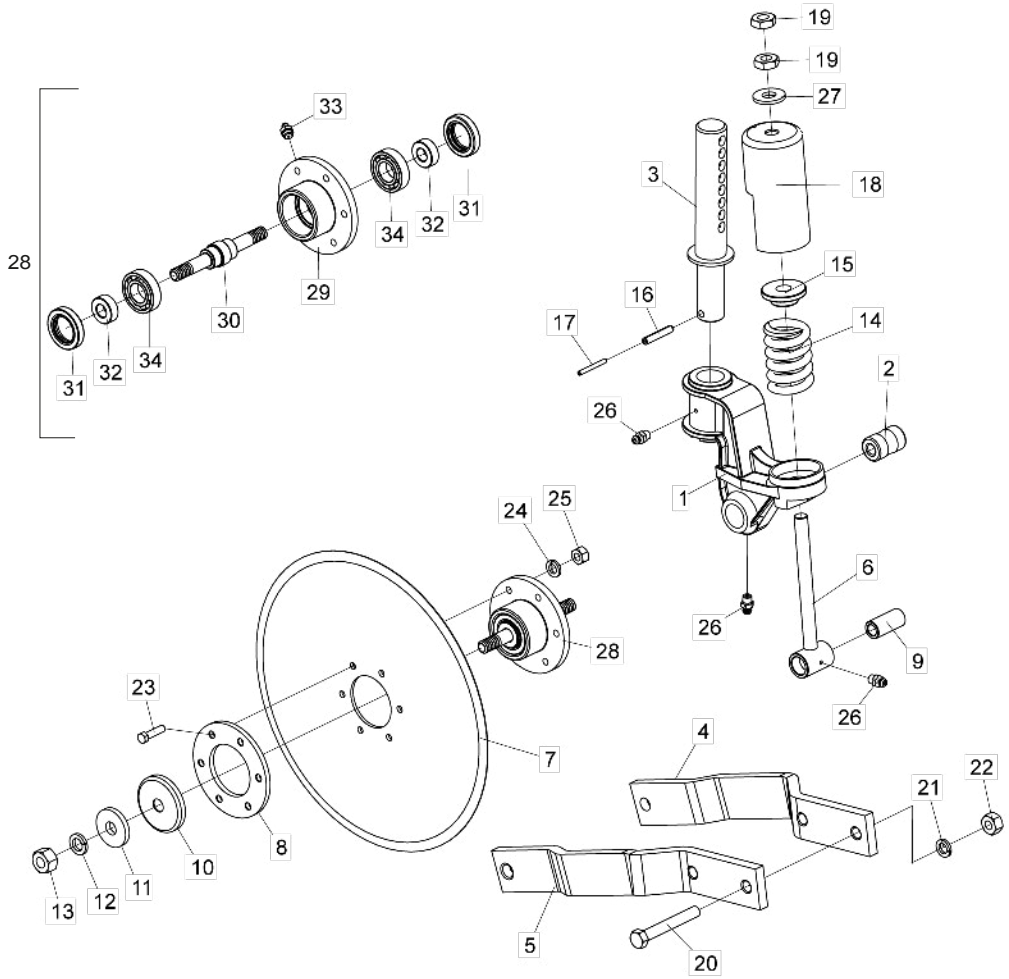

Item	Code	Product description	All
1	5530520076-9	Shaft Support	1
2	5080020762-0	Bushing Of Ø16 X Ø36,1 X 55Mm	1
3	5232030133-5	Small Shaft With Washer	1
4	5040010127-0	Left Bar	1
5	5040010126-1	Right Bar	1
6	5566010028-7	Rod Spring	1
7	2861427388-9	Coulter Plain Disc Blade 18 X 5,00 Hc Rd 80Mm + 6H Rd 10,3Mm D=115Mm Doble Bevel	1
7	3261427388-6	Rippled Plain Disc Blade 18 X 5,00 Hc Rd 80Mm + 6H Rd 10,3Mm D=115Mm Doble Bevel	1
8	5284010001-4	Flange Of Disc Hub	1
9	5080020661-5	Bushing Of Ø16,2 X Ø26,5 X 57Mm	1
10	5096010028-7	Hub Cap	2
11	5024010289-4	Smooth Washer Ø20 X Ø58 X 8,00Mm	2
12	6020010403-2	Pressure Washer M20	2
13	6020311265-6	Hexagonal Nut M20 X 2,50 MA CL8 CH.30mm Alt.16mm	2
14	6020250281-7	Helical Spring Ø43 X Ø67 X 141Mm Wire=Ø12Mm	1
15	6010600980-8	Back Bushing	1
16	6020310510-2	Heavy Elastic Pin Ø10 X 55Mm (Seeger Reno 701.220)	1
17	6020310472-6	Heavy Elastic Pin Ø6 X 55Mm (Seeger Reno 701.167)	1
18	6020310691-5	Spring Protection	1
19	6020310784-9	Hexagonal Nut 3/4" 10F Unc Gr5 Ch.1.1/4" Height 11,00Mm	2
20	6020311087-4	Hexagonal Head Bolt 5/8" X 4.1/2" 11F Unc1A Gr5 Rp	2
21	6020010412-1	Pressure Washer 5/8" Media Industry	2
22	6020310760-1	Hexagonal Nut 5/8" 11F Unc Gr5 Ch.1.1/16" Height 15,00Mm	2
23	6020311029-7	Hexagonal Head Bolt 3/8" X 1.1/2" 16F Unc1A Gr5 Rt	6
24	6020010406-7	Pressure Washer 3/8" Media Industry	6
25	6020310746-6	Hexagonal Nut 3/8" 16F Unc Gr5 Ch.9/16" Height 8,50Mm	6
26	6020130100-1	Grease Fitting 1/4"	3
27	5024010007-7	Smooth Washer Ø20,3 X Ø46,5 X 4,75Mm	1
28	5204020099-1	Complete Hub	1
29	5204010088-1	Disc Hub (Spare)	1
30	5232030120-3	Shaft R.Ø3/4" X 186Mm	1
31	6020350201-2	Retainer Ø40,00 X Ø62,00 X 12,00Mm	2
32	5080020761-1	Bushing Of Ø19,1 X Ø40 X 15Mm	2
33	6020130108-7	Grease Fitting 1/8"	1
34	6020350007-9	Bearing 6206	2

• 3rd Regulator ASDA-DR / CR

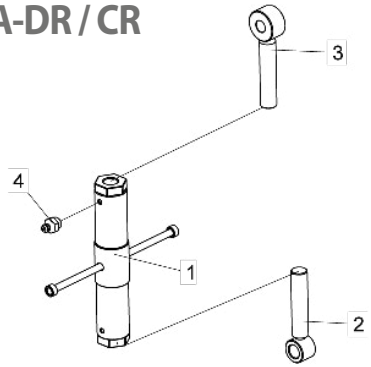

Item	Code	Product description	All
1	5484010029-7	Regulator R.1.1/4" Unc X 415Mm	1
2	5484010079-3	Left Regulator	1
3	5484040047-9	Right Regulator	1
4	6020130108-7	Grease Fitting 1/8"	2

• Cylinder ASDA-DR / CR

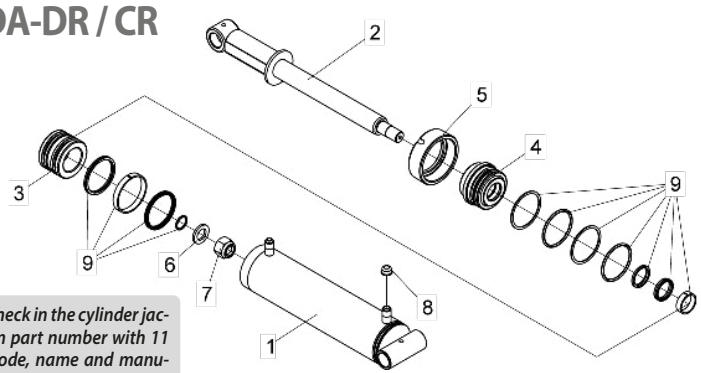

For spare parts order, please check in the cylinder jacket (1), the following: - Baldan part number with 11 numbers, the manufacturer code, name and manufacturer date.

Item	Code	Product description	All
1	5144010301-8	Jacked Ø88,90 x 437,5mm	1
2	5326010454-0	Piston Rod Ø41,27 (1.5/8") x 476.5mm	1
3	5236010001-4	Piston Plung De Ø26,72 X Ø88,30 X 60,00Mm	1
4	5152010010-9	Piston Coupling Ø41,68 X Ø88,70 X 66MM	1
5	5456050001-0	Piston Nut	1
6	5024010323-8	Smooth Washer Ø27 X Ø44,5 X 4,75Mm	1
7	6020310804-7	Self-Locking Nut With Nylon 1" 14F Uns Gr5 Ch.1.1/2" H.28,50Mm	1
8	6020390042-5	Plastic Cover Bt-21(Bt 10.0021.0 Nt) Colourless	2
9	6020190067-3	Repair Kit For Hydraulic Cyliders "D.A" 1.5/8" X 3.1/2"	1

• Oil Distributor ASDA-DR / CR

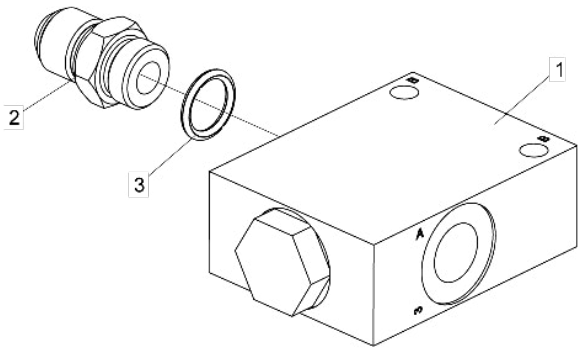

Item	Code	Product description	All
1	6020430204-1	Flow Divider Valve Hfb030731	1
2	5412010035-4	Nipple R.3/4" Unf X R.3/4" Unf X 38Mm With Hexagonal 7/8"	3
3	6020010022-3	O´Ring 2-114 N3006-90Nbr (15,54)	3

• Complete Subsoiler Shank (Helical Spring System) All Models

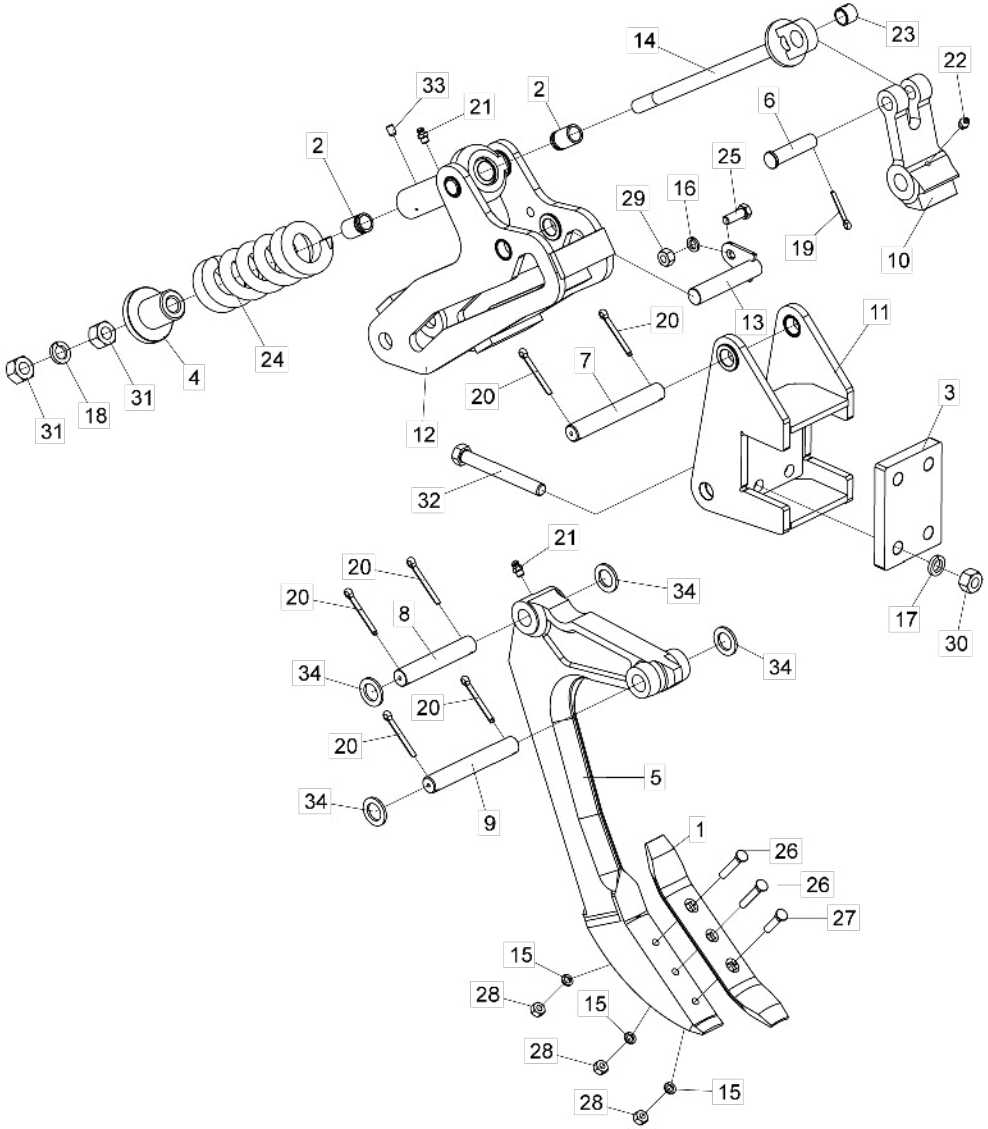

Item	Code	Product description	All
1	5054010003-6	Sweep Of Subsoiler Shank (76 X 11Mm)	1
2	5080010018-3	Bronze Bushing Of Ø26 X Ø35 X 50Mm	2
3	5136310448-0	Plate Of 182 X 148 X 1"	1
4	5248010015-8	Back Spring With Guide 70Mm	1
5	5326010068-4	Subsoiler Shank (Spare)	1
6	5432030187-7	Pin Ø1" X 100Mm	1
7	5432090211-0	Flat Pin Ø31,75 X 230Mm	1
8	5432090298-6	Flat Pin Ø1.1/4" X 164Mm	1
9	5432090309-5	Flat Pin Ø1.1/4" X 200Mm	1
10	5530010235-1	Disarm Support Of Spring	1
11	5530014651-0	Support Of Shank	1
12	5530014653-7	Support Of Spring	1
13	5558010029-4	Complete Lock Of Pin	1
14	5566070006-3	Rod Of Ø1" Complete	1
15	6020010410-5	Pressure Washer 1/2" Media Industry	3
16	6020010412-1	Pressure Washer 5/8" Media Industry	1
17	6020010418-0	Pressure Washer 7/8" Media Industry	4
18	6020010420-2	Pressure Washer 1" Media Industry	1
19	6020050106-6	Cotterpin 3/16" X 1.1/2"	1
20	6020050116-3	Cotterpin 1/4" X 2"	6
21	6020130100-1	Grease Fitting 1/4"	2
22	6020130108-7	Grease Fitting 1/8"	1
23	6020230086-6	Sleeve Ø26,5 X Ø32,5 X 25,40Mm	1
24	6020250204-3	Spring Ø57,80 X Ø102,22 X 340Mm	1
25	6020310179-4	Hexagonal Head Bolt 5/8" X 1.3/4" 11F Unc1A Gr5 Rt	1
26	6020310237-5	Screw Type A3 1/2" X 3" 12F Gr2 Rp	2
27	6020310252-9	Screw Type A3 1/2" X 2.1/4" 12F Gr2 Rp	1
28	6020310754-7	Hexagonal Nut 1/2" 12F W Gr5 Ch.7/8" Height 12,00Mm	3
29	6020310760-1	Hexagonal Nut 5/8" 11F Unc Gr5 Ch.1.1/16" Height 15,00Mm	1
30	6020310774-1	Hexagonal Nut 7/8" 9F Unc Gr5 Ch.1.7/16" Height 22,00Mm	4
31	6020310778-4	Hexagonal Nut 1" 8F Unc Gr5 Ch.1.5/8" Height 25,00Mm	2
32	6020311122-6	Hexagonal Head Bolt 7/8" X 7.1/2" 9F Unc1A Gr5 Rp	4
33	6020311233-8	Allen Bolt S/C 1/4" X 3/8" 20F Unc1A Cl12.9 Rt (Phosphated)	6
34	5024010093-0	Smooth Washer Ø33,5 X Ø52,5 X 3,00Mm	4

• Complete Subsoiler Shank (Plain Spring System) All Models

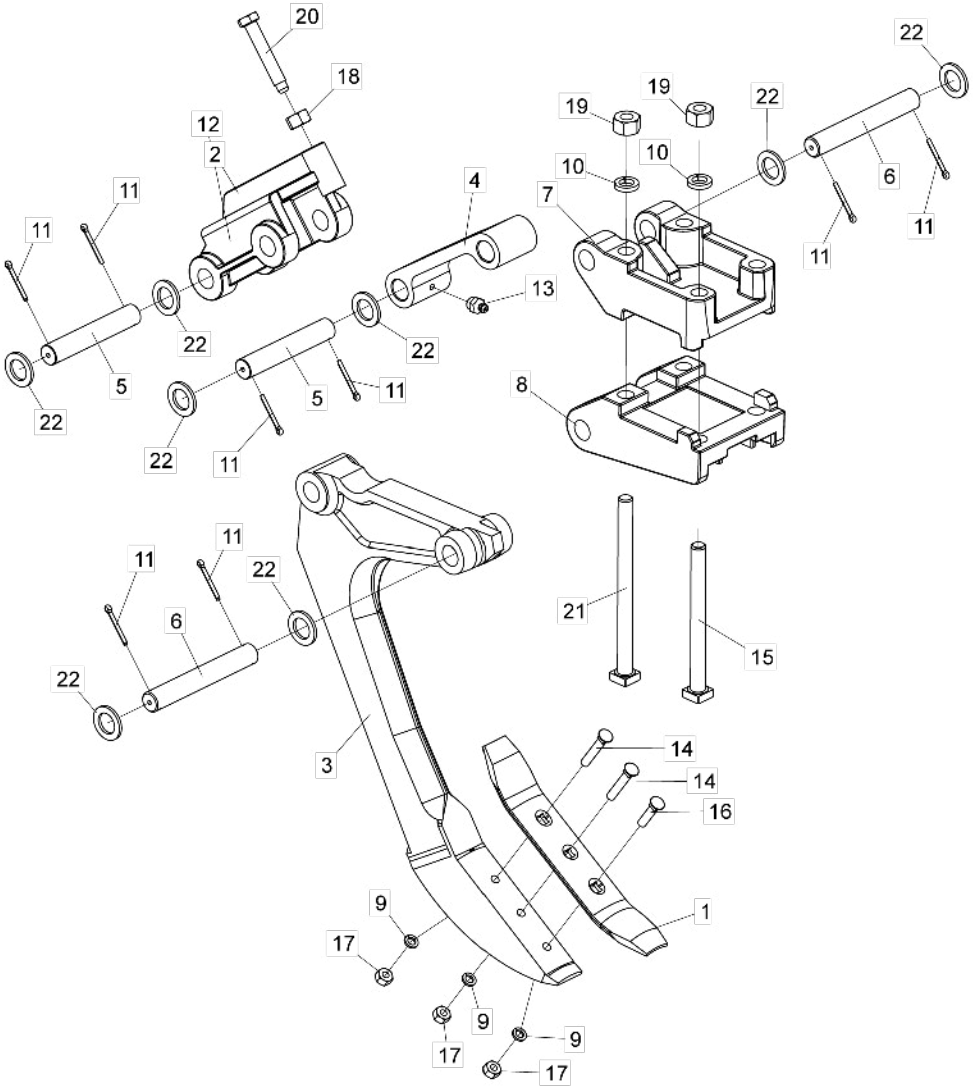

Item	Code	Product description	All
1	5054010003-6	Sweep Of Subsoiler Shank (76 X 11Mm)	1
2	5228010020-0	Shank Disarm	1
3	5326010068-4	Subsoiler Shank	1
4	5400010110-1	Plain Spring 217,5Mm	1
5	5432090298-6	Flat Pin Ø1.1/4" X 164Mm	2
6	5432090309-5	Flat Pin Ø1.1/4" X 200Mm	2
7	5530011483-0	Upper Support Of Tyne	1
8	5530011484-8	Lower Support Of Tyne	1
9	6020010410-5	Pressure Washer 1/2" Media Industry	3
10	6020010418-0	Pressure Washer 7/8" Media Industry	4
11	6020050116-3	Cotterpin 1/4" X 2"	8
12	6020130100-1	Grease Fitting 1/4"	1
13	6020130108-7	Grease Fitting 1/8"	2
14	6020310237-5	Screw Type A3 1/2" X 3" 12F Gr2 Rp	2
15	6020310245-6	Square Head Bolt 7/8" X 9.1/2" 9F Unc1A Gr5 Rp	2
16	6020310252-9	Screw Type A3 1/2" X 2.1/4" 12F Gr2 Rp	1
17	6020310754-7	Hexagonal Nut 1/2" 12F W Gr5 Ch.7/8" Height 12,00Mm	3
18	6020310770-9	Hexagonal Nut 3/4" 10F Unc Gr5 Ch.1.7/32" Height 18,50Mm	1
19	6020310774-1	Hexagonal Nut 7/8" 9F Unc Gr5 Ch.1.7/16" Height 22,00Mm	4
20	6020311102-1	Hexagonal Head Bolt 3/4" X 4.1/2" 10F Unc1A Gr5 Rt Special	1
21	6020317431-7	Square Head Bolt 7/8" X 11.1/2" 9F Unc1A Gr5 Rp	2
22	5024010093-0	Smooth Washer Ø33,5 X Ø52,5 X 3,00Mm	8

• Support Of Arm

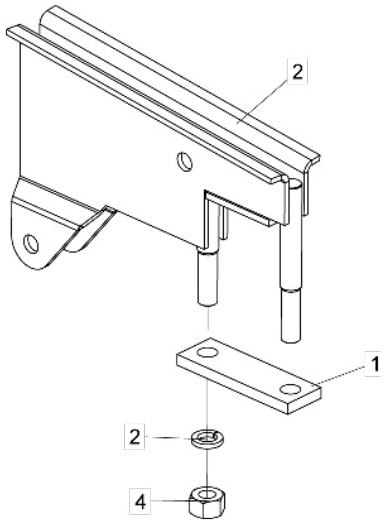

Item	Code	Product description	All
1	5040120970-8	Bar Of 2.1/2" X 5/8" X 200Mm	1
2	5530010429-0	Support Of Arm	1
3	6020010420-2	Pressure Washer 1" Media Industry	2
4	6020310778-4	Hexagonal Nut 1" 8F Unc Gr5 Ch.1.5/8" Height 25,00Mm	2

• Levelling Roller ASDA-DR

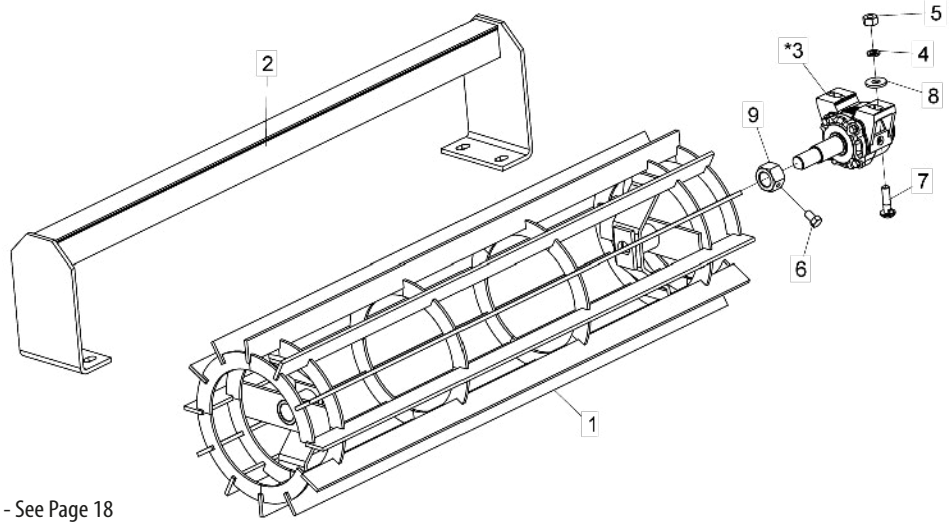

Item	Code	Product description	All	05 Shanks	07 and 11 Shanks	09 and 13 Shanks
1	5502030016-6	Levelling Roller Of 1900Mm		1		
1	5502030013-1	Levelling Roller Of 1300Mm			1	
1	5502030011-5	Levelling Roller Of 1600Mm				1
2	5530540023-7	Roller Support 1830Mm		1		
2	5530540021-0	Roller Support 1230Mm			1	
2	5530540022-9	Roller Support 1530Mm				1
*3	5368010424-3	Complete Right/Left Bearing Oil De 245Mm Without Protection P/Eixo Ø1.1/2"	2			
*3	5368010426-0	Complete Right/Left Bearing Grease De 245Mm Without Protection P/Eixo Ø1.1/2"	2			
4	6020010412-1	Pressure Washer 5/8" Media Industry	4			
5	6020310760-1	Hexagonal Nut 5/8" 11F Unc Gr5 Ch.1.1/16" Height 15,00Mm	4			
6	6020311030-0	Hexagonal Head Bolt 3/8" X 5/8" 16F Unc1A Gr2 Rt	2			
7	6020312010-1	French Head Bolt 5/8" X 2.1/4" 11F Unc1A Gr5 Rp With Lock	4			
8	5024010298-3	Smooth Washer Ø17 X Ø44 X 4,75Mm(Galvanized)	4			
9	5456010022-4	Hexagonal Nut 1.1/4" 7F Unc Gr5 Key.2" Height.31,00Mm With Hole R.3/8"	2			

* Item 3 - See Page 18

• Bearing (Grease) ASDA-DR

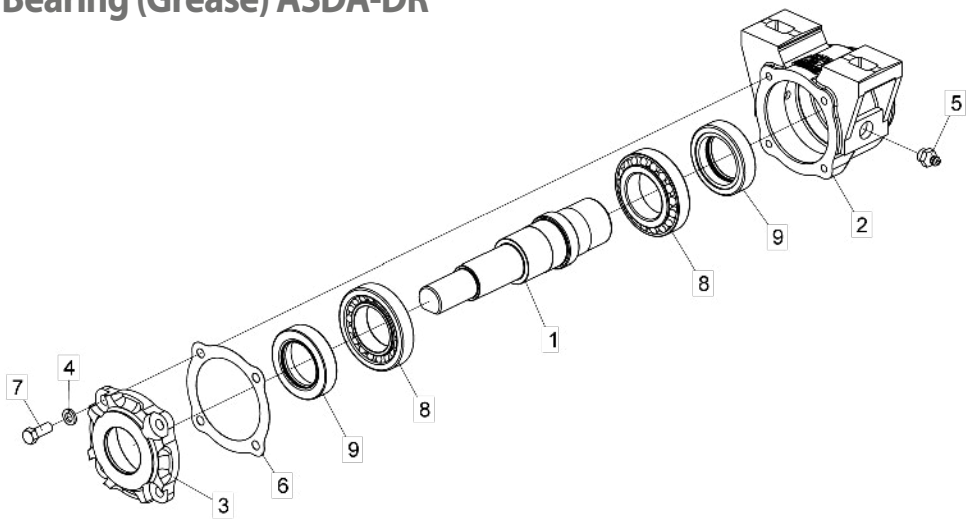

Item	Code	Product description	All
1	5232030102-5	Bushing Bearing	1
2	5368010079-5	Spare Front/Rear Grease Bearing (Without Protection	1
3	5538010031-1	Bearing Cover	1
4	6020010406-7	Pressure Washer 3/8" Media Industry	4
5	6020130108-7	Grease Fitting 1/8"	2
6	6020190104-1	Gascket Ø90 X Ø134 X 1/64"	4
7	6020310021-6	Hexagonal Head Bolt 3/8" X 1" 16F Unc1A Gr5 Rt (Phosphated)	4
8	6020350054-0	Bearing 30210	2
9	6020350236-5	Retainer Ø49,00 X Ø76,10 X 17,50Mm	2

• Radial Bearing (Oil) ASDA-DR

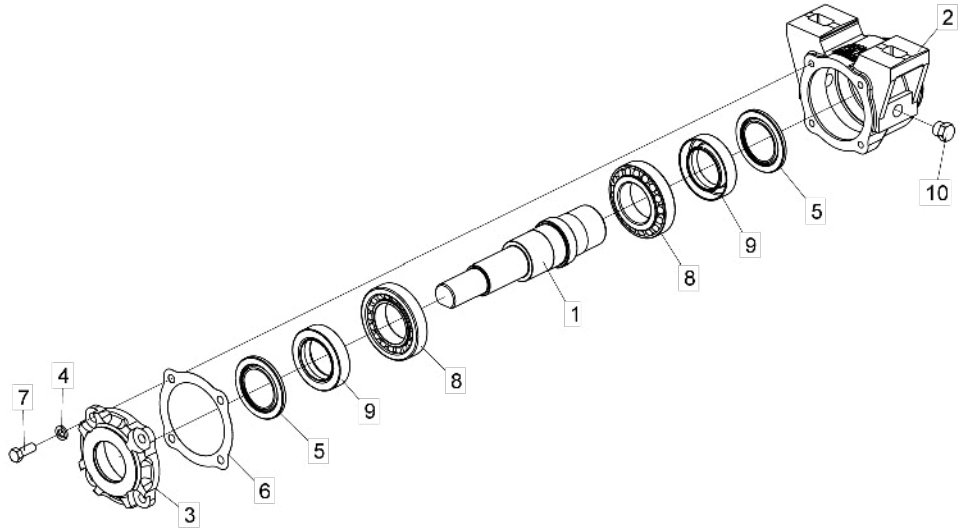

Item	Code	Product description	All
1	5232030102-5	Bushing Bearing	1
2	5368010077-9	Spare Front/Rear Oil Bearing (Without Protection	1
3	5538010031-1	Bearing Cover	1
4	6020010406-7	Pressure Washer 3/8" Media Industry	4
5	6020010472-5	Washer 1199(Joinseal)-1002(Arca)	2
6	6020190104-1	Gascket Ø90 X Ø134 X 1/64"	4
7	6020310021-6	Hexagonal Head Bolt 3/8" X 1" 16F Unc1A Gr5 Rt (Phosphated)	4
8	6020350054-0	Bearing 30210	2
9	6020350291-8	Retainer Ø49,00 X Ø76,00 X 17,50Mm	2
10	5081010007-6	Hexagonal Head Plug 3/4" - R.3/8" - 19F - Bspt(Gas)	2

• Stickers

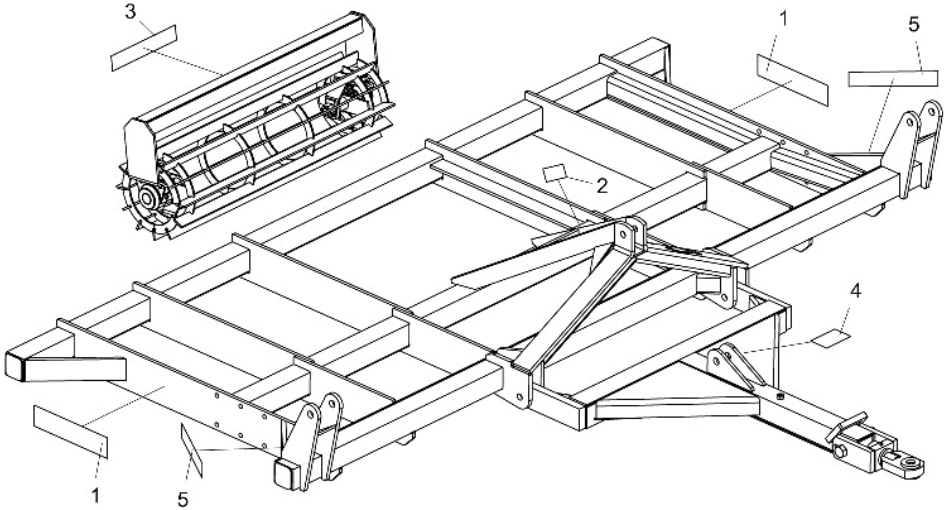

Item	Code	Product description	All	ASDA CR	ASDA DR	ASDA H
1	6020071094-3	Sticker Asda (100 X 410Mm)	2			
2	6020070886-8	Sticker Lubricate And Retighten (58 X 195Mm)	1			
3	5206010310-0	Sticker Disc Warning (150 X 95Mm)		1	1	
4	5206010008-0	Sticker Baldan Medium (70 X 395Mm)		1	1	
5	6020072274-7	Sticker Baldan (70 x 380mm)	2			

Item 1

Item 2

Item 3

Items 4 and 5

BALDAN

Numerical Index

Code	Page	Item
2861427388-9	13	7
3020310408-4	5	58
3261427388-6	13	7
5024010007-7	13	27
5024010039-5	5	42
5024010039-5	8	17
5024010039-5	10	2
5024010039-5	11	2
5024010061-1	5	23
5024010061-1	7	25
5024010068-9	12	3
5024010093-0	15	34
5024010093-0	16	22
5024010154-5	9	11
5024010192-8	5	24
5024010192-8	7	26
5024010192-8	8	3
5024010289-4	13	11
5024010296-7	9	8
5024010298-3	17	8
5024010323-8	14	6
5040010126-1	13	5
5040010127-0	13	4
5040120970-8	5	60
5040120970-8	17	1
5040120971-6	5	7
5040120971-6	8	18
5040121014-5	5	8
5040121014-5	7	11
5054010003-6	15	1
5054010003-6	16	1
5072010059-0	5	55
5072010059-0	8	12
5080010018-3	15	2
5080010303-4	11	2
5080020661-5	13	9
5080020761-1	13	32
5080020762-0	13	2
5081010007-6	18	10
5084040106-2	12	1
5084040107-0	12	1
5084040108-9	5	*2
5084040108-9	7	*2
5084040109-7	5	*2
5084040109-7	7	*2
5096010028-7	13	10
5096020004-4	10	3
5096020004-4	11	3
5096020006-0	11	3
5124010198-3	5	*4
5124040126-0	5	*4
5136310448-0	15	3
5138010005-7	5	51
5138010005-7	7	12
5138010005-7	8	7
5138050005-5	5	52
5138050010-1	5	53

Code	Page	Item
5138050010-1	7	13
5138050016-0	5	54
5138050016-0	7	14
5144010301-8	14	1
5152010010-9	14	4
5204010015-6	11	9
5204010063-6	10	8
5204010063-6	11	9
5204010088-1	13	29
5204010255-8	11	8
5204020099-1	13	28
5204060025-6	10	7
5204060025-6	11	8
5206010008-0	19	4
5206010310-0	19	3
5224010106-8	5	*9
5224010106-8	7	*4
5226010019-0	5	10
5226010019-0	7	15
5228010020-0	16	2
5232030102-5	18	1
5232030102-5	18	1
5232030120-3	13	30
5232030133-5	13	3
5236010001-4	14	3
5248010015-8	15	4
5284010001-4	13	8
5326010068-4	15	5
5326010068-4	16	3
5326010439-6	5	*5
5326010439-6	7	*6
5326010439-6	8	*9
5326010454-0	14	2
5326010673-4	7	*6
5326011673-4	5	*5
5326011673-4	8	*2
5332020007-1	12	3
5348050006-3	5	25
5348050006-3	7	27
5348050009-8	5	26
5348050009-8	7	28
5352070007-9	12	7
5368010077-9	18	2
5368010079-5	18	2
5368010313-1	9	14
5368010315-8	9	13
5368010416-2	9	12
5368010424-3	17	*3
5368010426-0	17	*3
5372011044-6	5	11
5372011044-6	7	16
5400010110-1	16	4
5404010187-2	9	1
5404010188-0	9	1
5404010189-9	9	1
5404010190-2	5	*1
5404010190-2	7	*1

Code	Page	Item
5404010191-0	5	*1
5404010191-0	7	*1
5404010192-9	5	*1
5404010192-9	7	*1
5404010957-1	8	*1
5404010958-0	8	*1
5404010959-8	8	*1
5404050159-5	9	1
5404050160-9	9	1
5404050161-7	9	1
5404050161-7	10	1
5404050162-5	9	1
5404050162-5	10	1
5404050163-3	9	1
5404050163-3	10	1
5404050164-1	5	*1
5404050164-1	7	*1
5404050165-0	5	*1
5404050165-0	7	*1
5404050166-8	5	*1
5404050166-8	7	*1
5404050167-6	5	*1
5404050167-6	7	*1
5404050168-4	5	*1
5404050168-4	7	*1
5412010035-4	14	2
5432010025-1	5	12
5432010025-1	7	17
5432010228-9	5	28
5432030187-7	15	6
5432060031-9	8	5
5432090211-0	15	7
5432090298-6	15	8
5432090298-6	16	5
5432090309-5	15	9
5432090309-5	16	6
5432120022-5	5	27
5432120022-5	8	15
5432120029-2	5	27
5432120029-2	7	29
5432120040-3	5	29
5432120040-3	8	20
5432120090-0	5	30
5432120090-0	7	30
5432120108-6	5	31
5432120108-6	7	31
5432120108-6	8	8
5432120117-5	5	13
5432120117-5	7	18
5456010022-4	12	4
5456010022-4	17	9
5456020007-5	11	4
5456050001-0	14	5
5484010029-7	14	1
5484010079-3	14	2
5484010119-6	5	*14
5484010119-6	7	*3

Code	Page	Item
5484040047-9	14	3
5498010289-3	12	10
5498010298-2	10	*2
5498010299-0	10	*3
5498100005-9	5	56
5498100005-9	7	7
5498100072-5	5	64
5498100092-0	5	56
5498100092-0	7	7
5502030005-0	5	*6
5502030008-5	5	*6
5502030011-5	17	1
5502030013-1	17	1
5502030014-0	5	*6
5502030014-0	8	*21
5502030015-8	5	*6
5502030016-6	17	1
5502030017-4	5	*6
5502030018-2	5	*6
5502030018-2	8	*21
5530010188-6	5	15
5530010188-6	7	19
5530010235-1	15	10
5530010428-1	5	*3
5530010428-1	8	*10
5530010429-0	5	61
5530010429-0	17	2
5530010953-4	5	16
5530011140-7	10	1
5530011141-5	9	*2
5530011142-3	10	1
5530011143-1	9	*2
5530011144-0	10	1
5530011145-8	9	*2
5530011146-6	9	3
5530011147-4	9	4
5530011483-0	16	7
5530011484-8	16	8
5530014651-0	15	11
5530014653-7	15	12
5530060001-7	5	17
5530060001-7	7	20
5530100255-5	9	9
5530100256-3	9	10
5530100263-6	12	9
5530100264-4	12	9
5530490038-4	11	1
5530490039-2	11	1
5530490041-4	9	*2
5530490042-2	9	*3
5530490046-5	11	1
5530490047-3	11	1
5530490048-1	9	*3
5530490049-0	9	*2
5530520076-9	13	1
5530540021-0	17	2
5530540022-9	17	2

Code	Page	Item
5530540023-7	17	2
5538010031-1	18	3
5538010031-1	18	3
5558010029-4	15	13
5558020002-7	11	5
5558040023-9	5	18
5558040023-9	7	21
5558080009-1	12	13
5558080010-5	12	12
5566010028-7	13	6
5566070006-3	15	14
6010600980-8	13	15
6010601523-9	5	19
6010601523-9	5	19
6010601523-9	7	22
6020010022-3	14	3
6020010402-4	5	32
6020010402-4	7	32
6020010403-2	13	12
6020010406-7	12	4
6020010406-7	13	24
6020010406-7	18	4
6020010406-7	18	4
6020010410-5	12	8
6020010410-5	15	15
6020010410-5	16	9
6020010412-1	5	33
6020010412-1	5	33
6020010412-1	7	33
6020010412-1	13	21
6020010412-1	15	16
6020010412-1	17	4
6020010414-8	5	34
6020010414-8	8	14
6020010414-8	9	5
6020010414-8	9	4
6020010414-8	10	4
6020010418-0	15	17
6020010418-0	16	10
6020010420-2	5	62
6020010420-2	15	18
6020010420-2	17	3
6020010453-9	12	7
6020010472-5	18	5
6020050102-3	10	4
6020050102-3	11	4
6020050106-6	15	19
6020050114-7	8	6
6020050116-3	5	35
6020050116-3	5	35
6020050116-3	7	34
6020050116-3	8	11
6020050116-3	15	20
6020050116-3	16	11
6020050126-0	9	5
6020050356-5	5	59
6020050356-5	7	10

Code	Page	Item
6020050358-1	5	59
6020050358-1	7	10
6020050362-0	5	67
6020055720-7	5	*20
6020055720-7	7	*5
6020070886-8	19	2
6020071094-3	19	1
6020072274-7	19	5
6020130100-1	12	2
6020130100-1	13	26
6020130100-1	15	21
6020130100-1	16	12
6020130108-7	5	36
6020130108-7	7	35
6020130108-7	9	6
6020130108-7	10	9
6020130108-7	11	5
6020130108-7	11	10
6020130108-7	11	10
6020130108-7	12	6
6020130108-7	12	2
6020130108-7	13	33
6020130108-7	14	4
6020130108-7	15	22
6020130108-7	16	13
6020130108-7	18	5
6020190067-3	14	9
6020190104-1	18	6
6020190104-1	18	6
6020230086-6	15	23
6020250204-3	15	24
6020250281-7	13	14
6020250348-1	5	21
6020250348-1	8	19
6020250739-8	5	22
6020250739-8	7	23
6020250792-4	5	22
6020250792-4	7	23
6020250796-7	5	22
6020250796-7	7	23
6020250889-0	5	22
6020250889-0	7	23
6020250892-0	5	22
6020250892-0	7	23
6020250913-7	5	22
6020250913-7	7	23
6020250999-4	5	22
6020250999-4	7	23
6020251004-6	5	22
6020251004-6	7	23
6020251013-5	5	22
6020251013-5	7	23
6020310021-6	18	7
6020310021-6	18	7
6020310054-2	12	5
6020310096-8	11	11
6020310128-0	11	6

Code	Page	Item
6020310179-4	15	25
6020310206-5	5	37
6020310206-5	7	36
6020310237-5	15	26
6020310237-5	16	14
6020310245-6	16	15
6020310248-0	12	5
6020310252-9	15	27
6020310252-9	16	16
6020310406-8	5	58
6020310406-8	7	9
6020310408-4	7	9
6020310413-0	5	66
6020310421-1	5	38
6020310421-1	7	37
6020310472-6	13	17
6020310510-2	13	16
6020310559-5	9	7
6020310691-5	13	18
6020310738-5	5	40
6020310742-3	5	39
6020310742-3	7	38
6020310746-6	13	25
6020310754-7	12	2
6020310754-7	15	28
6020310754-7	16	17
6020310760-1	5	41
6020310760-1	5	41
6020310760-1	7	39
6020310760-1	13	22
6020310760-1	15	29
6020310760-1	17	5
6020310761-0	9	8
6020310770-9	5	43
6020310770-9	8	13
6020310770-9	9	9
6020310770-9	9	6
6020310770-9	10	5
6020310770-9	16	18
6020310774-1	15	30
6020310774-1	16	19
6020310778-4	5	63
6020310778-4	15	31
6020310778-4	17	4
6020310784-9	13	19
6020310800-4	10	5
6020310800-4	11	6
6020310804-7	14	7
6020310805-5	11	12
6020310807-1	11	13
6020310816-0	10	10
6020310816-0	11	11
6020310998-1	10	11
6020310998-1	11	12
6020311020-3	10	6
6020311020-3	11	7
6020311020-3	11	7

Code	Page	Item
6020311029-7	13	23
6020311030-0	12	6
6020311030-0	17	6
6020311043-2	5	44
6020311075-0	17	7
6020311078-5	11	14
6020311081-5	5	45
6020311082-3	5	46
6020311087-4	13	20
6020311096-3	9	10
6020311096-3	9	7
6020311096-3	10	6
6020311102-1	16	20
6020311103-0	5	48
6020311103-0	8	16
6020311122-6	15	32
6020311233-8	15	33
6020311265-6	13	13
6020312001-2	12	1
6020312083-7	5	47
6020312083-7	7	24
6020317431-7	16	21
6020350007-9	13	34
6020350022-2	12	11
6020350054-0	18	8
6020350054-0	18	8
6020350056-7	10	12
6020350056-7	11	13
6020350056-7	11	15
6020350074-5	11	16
6020350080-0	10	13
6020350080-0	11	14
6020350201-2	13	31
6020350224-1	10	14
6020350224-1	11	15
6020350236-5	18	9
6020350242-0	11	17
6020350291-8	18	9
6020350397-3	5	65
6020350402-3	5	57
6020350402-3	7	8
6020350418-0	5	57
6020350418-0	7	8
6020390042-5	14	8
6020390301-7	5	49
6020390301-7	7	40
6020390308-4	5	50
6020390308-4	7	41
6020390308-4	8	4
6020430204-1	14	1

BALDAN

Avenida Baldan, 1500
Nova Matão
15.993-900
Matão/SP - Brasil
sac@baldan.com.br
export@baldan.com.br

+55 16 3221 6500
baldan.com.br